# Loan Container Incoming Inspection

KONG®-C VBR System

# Overview Instrumentation

**43-090-1**

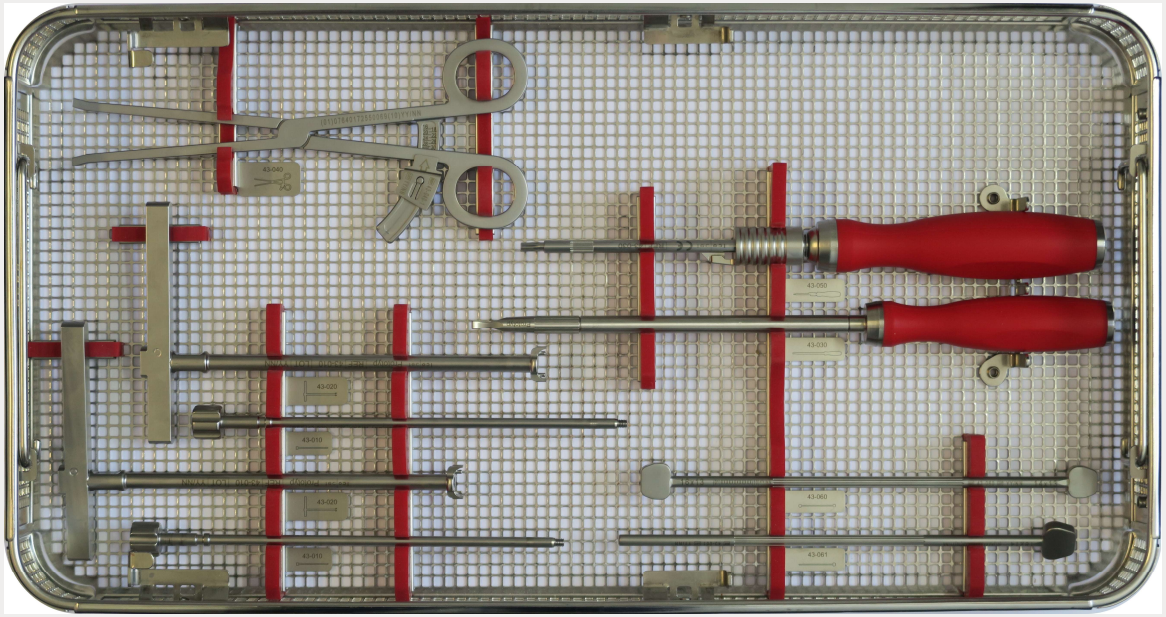

**43-090-3**

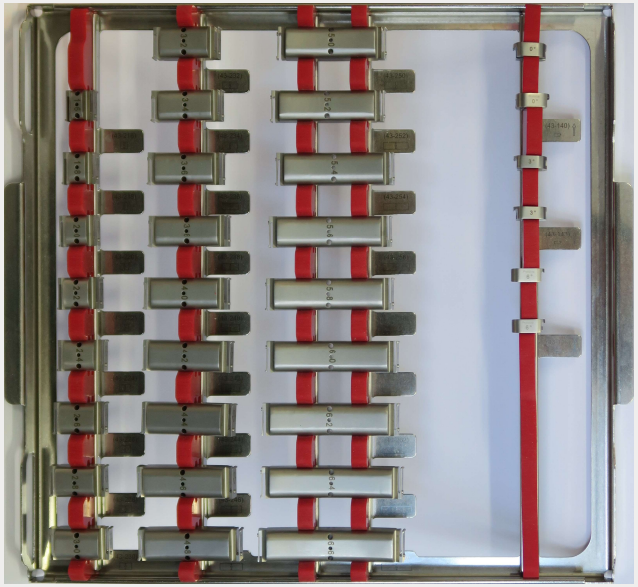

# Overview Inspection Aids

## Screw M6 (H280)

# General Control

- **Do the contents of the container correspond to the kit profile?**
- **Are the instruments intact (not clearly damaged)?**
- **Is the laser marking legible/the data matrix code visible?**
  - Instruments where the laser marking is no longer legible must be replaced.
  - Instruments where the data matrix code (UDI) is no longer visible must be replaced. (When available, a scanner can be used to check the data matrix code.)

- **Movable parts/joints – maintenance using surgical instrument oil!**

  → **Functional inspections for instruments** (see following pages)

- **If an instrument is replaced, all tests involving this instrument have to be repeated.**
- **Instructions for Reprocessing: 0222US**

# Functional Inspection

- **Inserter Sleeve (43-010) and Inserter Rod (43-020)**
  - Visual check of thread on inserter rod
  - Inserter rod can be slid into inserter sleeve
  - Thread has to stand proud (marked in red)
  - Inserter rod must not fall out due to its own weight
  - Inserter rod can be turned with just minimal friction

- **Insertion Instrument and Trial Bodies (43-2xx)**
  - All trial bodies can be mounted securely onto the insertion instrument and do not wobble

# Functional Inspection

- **Trial End Plates (43-1xx) and Trial Bodies (43-2xx)**
  - Trial end plates can be mounted with minimal effort, shall not cant or tilt
  - Trial end plates shall catch in the trial bodies
  - Assemble 3 different bodies with 3 different end plates

# Functional Inspection

- **Screwdriver (43-030)**
  - Is the tip intact?
  - Blade can be actuated via sleeve
  - Can the screwdriver be disassembled and reassembled?
  - Dimensional check of the tip with a screw M6 (H280)
  - Can the screw be mounted onto the screwdriver by pulling back the sleeve? Sleeve has to be released after picking up the screw
  - The screw must not wobble on the screwdriver (shake test)
  - Moving parts/joints – maintenance using surgical instrument oil!

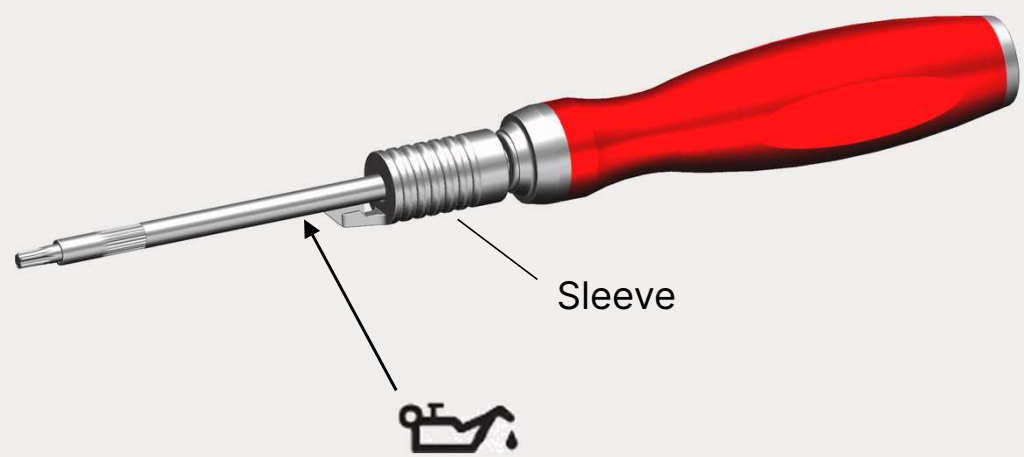

# Functional Inspection

## Height Forceps (43-040) and Drag Pointer (43-040-1)

- Moving parts/hinges/joints – maintenance using surgical instrument oil!
- Lubricate the sliding surface of the forceps; after lubrication, repeatedly operate the movable parts
- The height forceps is functional in the range between 16 mm and 66 mm.
- Functional testing: resistance can be felt when moving the drag pointer
- Functional testing: drag pointer can be mounted and dismounted on the forceps
- Functional testing: check with stencil (print 100%) or with caliper that height forceps is not bent; bent instruments must be replaced

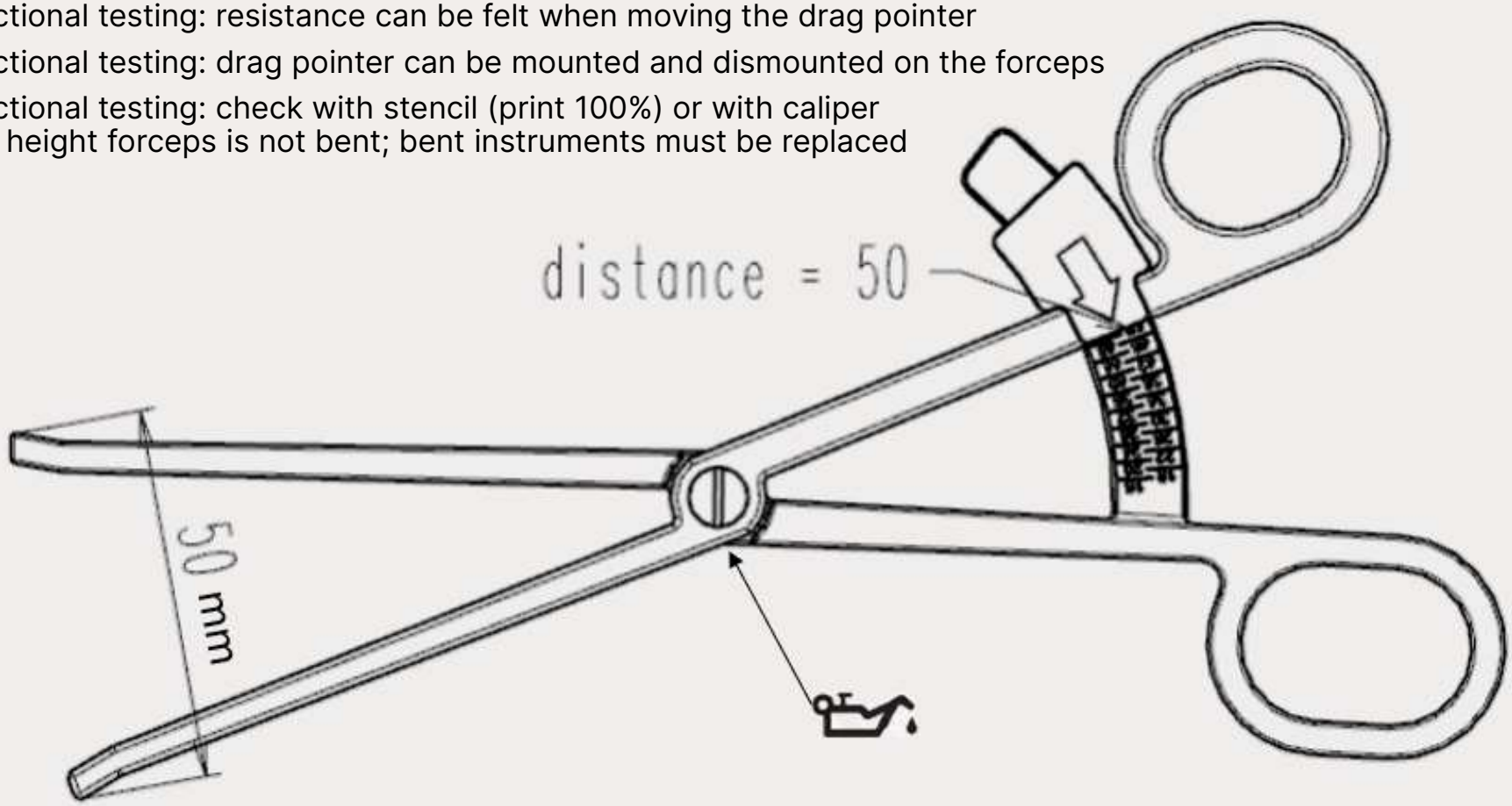

0233US.2025-04